Product picture

Product: **POLO Single-lever basin mixer DN 10**

Ref.: **RAK30000**

Product description

solid lever
single hole mounted
flow class A
aerator M 24 x I
ceramic cartridge with hot water safety device
pop up waste 1 1/4 inch
flexible high pressure supply tubes 3/8 inch
rapid installation set
in accordance to ..EN 817

Finishes:
05 chrome plated

Dimensional drawing

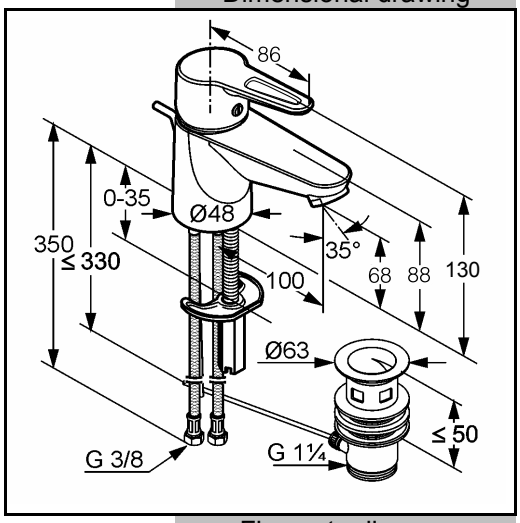

Advertisement

* KLUDI RAK LLC item no. RAK30000
** chrome plated brass, in accord. to ..EN 50930-6
*** in accordance to .. EN 817
**** ceramic cartridge with hot water safety device Ø 35 mm

single-lever basin mixer, manufacturer KLUDI RAK LLC item no. RAK30000, DN 10, chrome plated brass, ceramic cartridge with hot water safety device Ø 35 mm, solid lever, noise level DIN EN 4109 group I, report no. P- IX.., type: single-lever basin mixer DN 10, flow class A (max. 0,25 l/s), aerator M 24 X I A, pop up waste 1 1/4 inch, flexible high pressure supply tubes 3/8 inch with DVGW / KIWA / WRAS approv. with metal body length 350 mm, nozzle projection 100 mm, nozzle height 58 mm, lever projection 84 mm, rapid installation set, overall length 118 mm, for pressure type water heater, continuous line heater,

Flow rate diagram

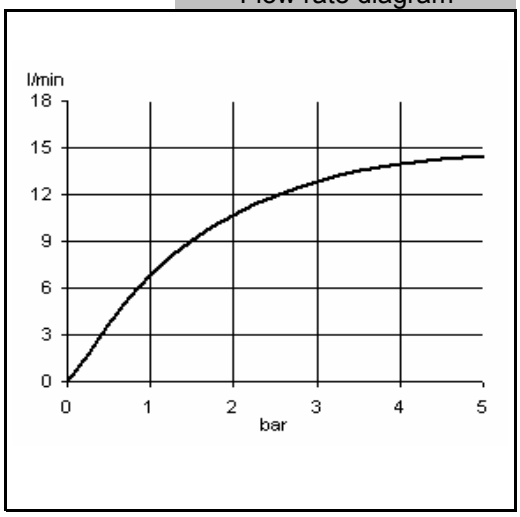

KLUDI
RAK